PARTS LIST FOR MODEL 30VSX

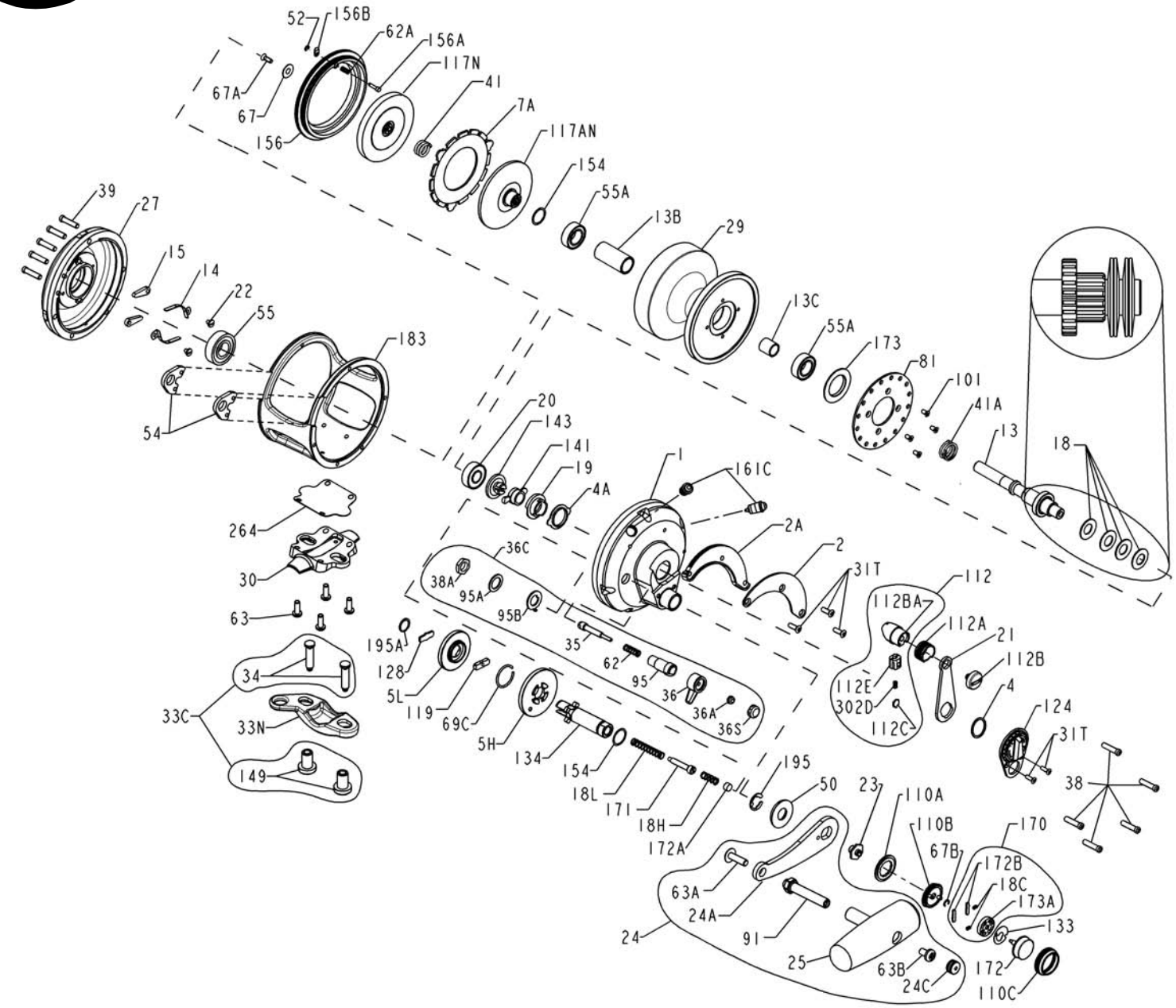

KEY NO.	DESCRIPTION	PART NO.
1	1-30VS R. S. Plate Assembly	1180415
2	2-30VS Quadrant Ring	1180592
2A	2A-30VS Quadrant Spacer	1180655
4	4-12LT Thrust Washer	1180748
4A	4-30VS Cam Bushing	1180752
5H	5-30VSHS High Main Gear	1180815
5L	5-30VSLS Low Main Gear	1180816

KEY NO.	DESCRIPTION	PART NO.
7A	7A-30VS Metal Drag Washer	1181032
13	13-30VSX Pinion Gear	1191098
13B	13B-30VS Pinion Gear Sleeve	1191124
13C	13B-70 Spool Sleeve	1181371
14	14-16S Dog Spring (2 req)	1181388
15	15-50 Dog (2 req)	1181425

KEY NO.	DESCRIPTION	PART NO.
18	18-30TW Clutch Spring (4 req)	1181611
18C	18C-15KG Spring (2 req)	1181632
18H	18H-30VS Shift Spring (Heavy)	1181634
18L	18L-30VS Shift Spring (Light)	1181637
19	19-30VS Drag Cam	1181643
20	20-704 Ball Bearing	1181790

KEY NO.	DESCRIPTION	PART NO.
21	21-30VS Drag Lever	1181828
22	22-109 Dog Spring Screw (2 req)	1181912
23	23-30VS Handle Screw	1181933
24	24-30VS Handle Assembly	1181972
24A	24-30VS-1 Handle Blank	1205614
24C	24C-50M Handle Knob Cap	1191334
25	25S-50M Molded Handle Knob	1206009
27	27-30VSX Left Side Plate Assembly	1192670
29	29L-30VSX Spool Assembly	1191530
30	30-30VS Stand	1191551
31T	31T-70 Short Screw (5 req)	1182700
33C	33C-70VS Clamp Screw w/Nut Kit (2 ea)	1182770
33N	33N-70 Rod Clamp	1191619
34	34-70VS Rod Clamp Screw (2 req)	1182902
35	35-70 Click Tongue	1182902
36	36N-50 Click Lever	1183047
36A	36-700 Click Lever Nut	1183014
36C	36C-30VSW Click Assembly Kit	1191712
36S	36S-80ST Click Lever Cap	1183051
38	38-16VS R.S. Plate Screw (5 req)	1191723
38A	38-710 Click Bushing Nut	1183157
39	39-16VS L.S. Plate Screw (5 req)	1191739
41	41-25FR Drag Spring	1183332
41A	41-70 Pinion Spring	1183328
50	50-50VS Shield	1191966
52	52-910 Retaining Ring	1183840
54	54-30T Harness Lug (2 req)	1183852
55	55-80 Ball Bearing	1183878
55A	55-80ST Ball Bearing (2 req)	1183879
62	62-50 Click Spring	1184022
62A	62-545 Drag Cover Lock Spring	1184029
63	63-30T Stand Screw (4 req)	1184045
63A	63A-50 Handle Rivet Screw	1184056
63B	63-50 Handle Knob Screw	1184046
67	67-70 Pinion Retaining Washer	1184106
67A	67A-70 Pinion Retaining Screw	1184111
67B	67-30VS Shifter Retaining Ring	1184105
69C	69C-245 H / L Gear Retaining Ring	1184133
81	81-50 Ratchet Disk Plate	1184204
91	91S-50 Handle Rivet	1206011
95	95-70 Click Tongue Bushing	1184307
95A	95A-20 Serrated Click Washer	1184310
95B	95A-50 Tab Click Washer	1184311
101	101-30 Drag / Ratchet Screw (4 req)	1184403
110A	110A-30VS Handle Screw Locking Ring	1184440
110B	110B-30VS Shifter Base	1184446
110C	110C-30VS Shifter Button Retaining Ring	1184447
112	112-30VS Drag Knob Assembly	1184456
112A	112A-30VS Drag Knob Sleeve	1184460
112B	112B-70 Drag Knob Screw	1184464
112BA	112B-30VS Drag Lever Knob	1192711
112C	112C-30VS Drag Click Plate	1192712
112E	112E-30VS Click Plate Housing	1192713
117AN	117AN-50S Inner Drive Plate Assembly	1184495
117N	117N-50S Drive Plate Assembly	1184507
119	119-24KG Hi/Low Gear Shift Plate	1184515
124	124L-30VS Bridge Cover Assembly	1184548
128	128A-24KG Low Gear Drive Plate	1184566
133	133-30VS Shifter Retaining Plate	1184602
134	134-30VS Gear Stud	1184613
141	141-30VS Cam Follower	1184652
143	143-16VS Drag Preset Adjusting Screw	1184670
149	149-70 Rod Clamp Nut (2 req)	1184703
154	154-80 Shim (2 req) Gear Stud/Drive Plate	1184719
156	156-30VS Drag Cover Assembly	1184736
156A	156A-30VS Drag Cover Lock Pin	1184752
156B	156B-30VS Drag Cover Lock Plate	1184756
161C	161C-30VSW Drag Locating Asm (2 req)	1192369
170	170-30VS Catch Housing Assembly	1184809
171	171-30VS Shifter Plunger (Screw)	1184813
172	172-30VS Shifter Button	1184821
172A	172B-30VS Shifter Spacer	1184831
172B	173-30VS Shifter Catch Plate (2 req)	1184835
173	173-50VS Spool Bushing	1184838
173A	173A-30VS Shifter Catch Housing	1184848
183	183-30VSX Frame Asembly	1192732
195	195-40 Gear Stud Retaining Ring	1184955
195A	195-24KG Spiral Retaining Ring	1184954
264	264-30VS Stand Gasket	1192542
302D	302D-525MAG Drag Click Plate Spring	1185255